版次 (Vension)	变更内容 (Rev. Content)	变更者 (Change Person)

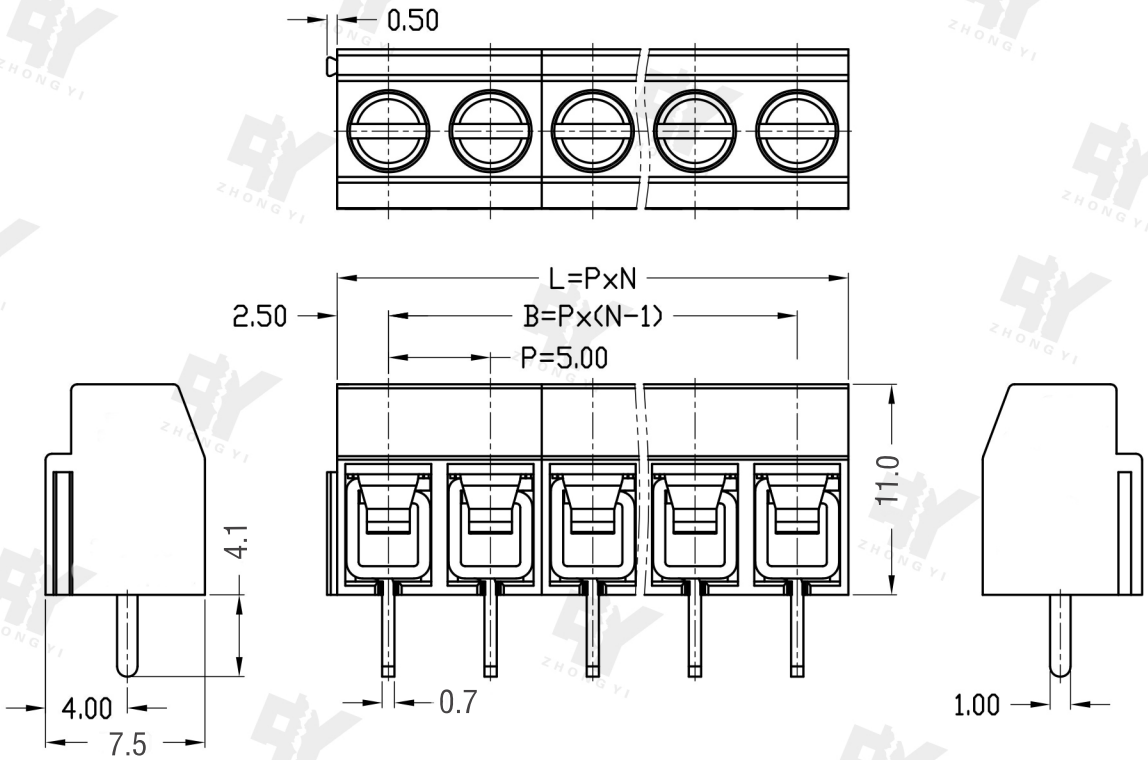

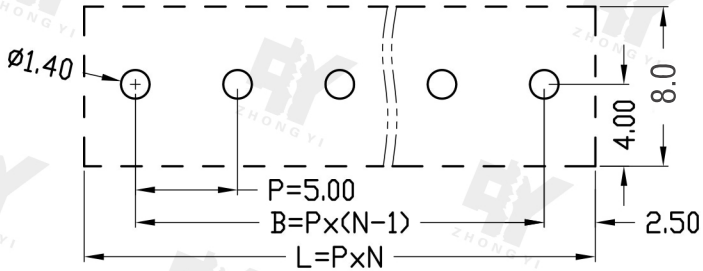

PCB LAYOUT

技术参数 (Technical Data)		
项 目(Item)	UL	IEC
额定电气参数 (Rated Electrical Parameters)	300V/10A	250V/18A
压线范围 (Wire Range)	26～14AWG	2.5mm²
工频耐压 (Frequency Voltage)	AC 2500V	
冲击耐压 (Rated Surge Voltage)	4000V	
绝缘阻抗 (Insulation Resistance)	DC500V 500MΩ above	
接触电阻 (Contact Resistance)	≤8mΩ	
剥线长度 (Strpping Length)	6～7mm	
工作温度 (Temperature)	-40°C～+105°C	
材质和电镀(Material and plating)		
绝缘材质(Housing)	PA66(UL94 V-0)	
触点材料(Contact)	铜合金，镀锡(Copper alloy, Sn plated)	
螺丝(Screws)	钢，镀锌(Steel, Zn plated)	
弹片(Spring)	不锈钢(Stainless)	

订购方式/HOW TO ORDER:

[ ] - [ ] - [ ][ ] P - [ ][ ][ ] - [ ][ ][ ] 客户需求 Customer Request

型号 Model

端子间距 Pitch

极数 Pole

0	未定义No definition
1	单倍间距Single pitch
2	双倍间距Double pitch

颜色Color

10	灰色Grey	40	绿色Green	70	透明Transparent
20	蓝色Blue	50	橙色Orange	80	黄色Yellow
30	黑色Black	60	红色Red	90	白色White

P=5.00mm,N为孔位数(N for hole digits),有效位数为(Significant Digits)：02P,03P～XXP

N	02P	03P	04P	05P	06P	07P	08P	09P	10P	11P	12P	13P
L	10.00	15.00	20.00	25.00	30.00	35.00	40.00	45.00	50.00	55.00	60.00	65.00
B	5.00	10.00	15.00	20.00	25.00	30.00	35.00	40.00	45.00	50.00	55.00	60.00
N	14P	15P	16P	17P	18P	19P	20P	21P	22P	23P	24P	···
L	70.00	75.00	80.00	85.00	90.00	95.00	100.00	105.00	110.00	115.00	120.00	
B	65.00	70.00	75.00	80.00	85.00	90.00	95.00	100.00	105.00	110.00	115.00	

慈溪市中益电子器材厂
CIXI ZHONGYI ELECTRONICS FACTORY

型号(Type): HQ126V-5.0

核准(Approval):	图号(Drawing NO.):	
审核(Audit):	单位(Units):mm	页码(Page): 1/1
设计(Design):	比例(Scale):FULL	

公差范围(Tolerance Range)		
150～		±1.50
60～150		±1.00
30～60		±0.60
6～30		±0.40
0～6		±0.25
角度 (Angle)	X	±2°
	X.X	±1°

版次(Version): T0